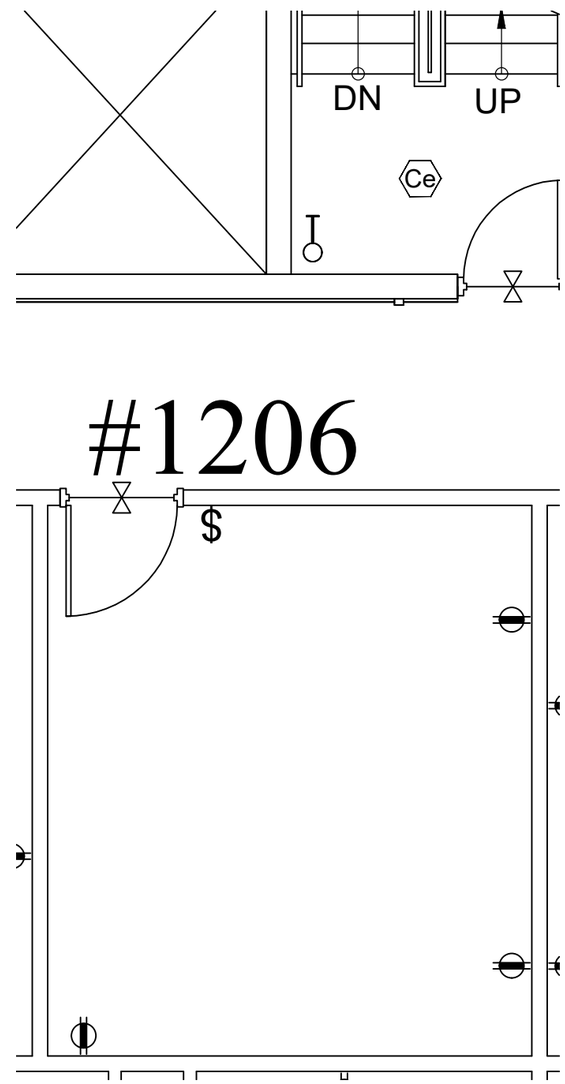

Suite 1206

235 RSF

SCALE: 1/4" = 1'-0"
(11x17)

*Note That All Dimensions Are Approximate and subject to change without notice

Legend:

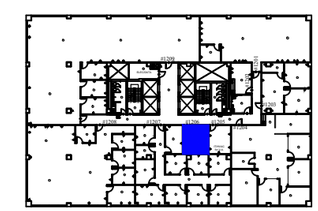

Key Plan

no.	issue	date

Title:
Twelfth Floor

Scale: 1/4" = 1'-0"

Drawn By:

Date:

Project Name and Location:
1407 Union Avenue
Memphis, TN 38104

OLYMBEC USA
1004 East Brooks Road
Memphis,TN 38116
Tel: 1-888-OLYMBEC
WWW.OLYMBEC.COM

Suite/Room #
Suite #1206

G:\Cad Files\Union Avenue 1407, Memphis, TN\1407 Union Ave Memphis, TN - Mid Memphis Tower.dwg, 10/18/2023 12:40:17 PM, icarlisle, Olymbec, Olymbec